3 + ⏚
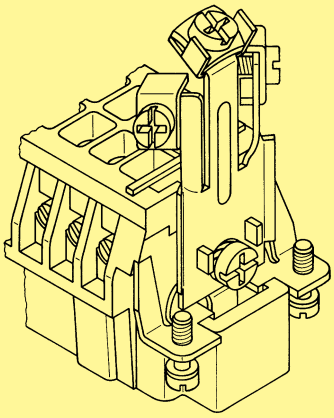
Identification	Part number	Drawing	Dimensions in mm
PE Multiple ground connection Range of delivery: Multiple ground connection Fixing screw M4 with washer	09 33 000 9992