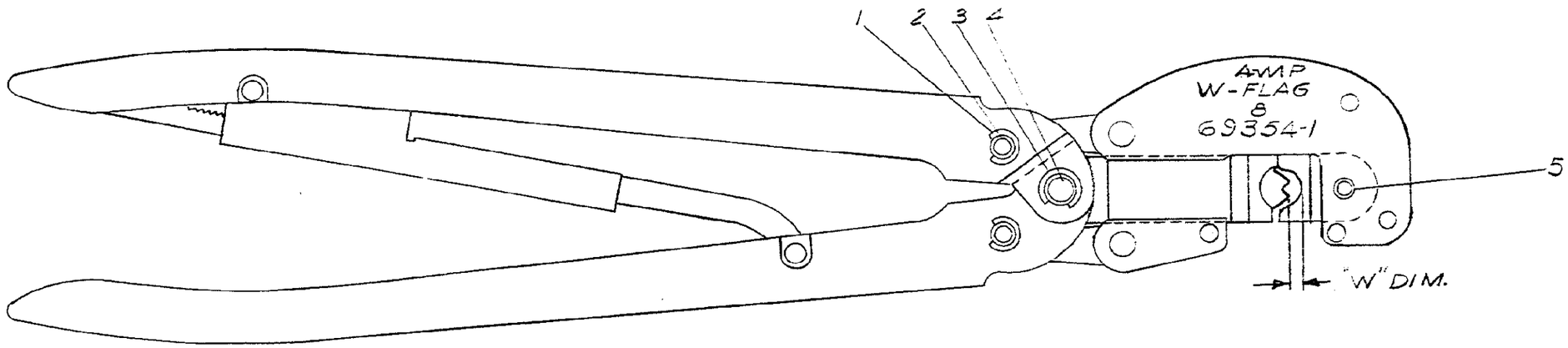

"W" DIM.	
GO	NO GO
.100	.106

PLUG GAGE DIMENSIONS APPLY WHEN TOOL IS BOTTOMED BUT NOT UNDER PRESSURE.

SUPERSEDED BY I.S. 1254

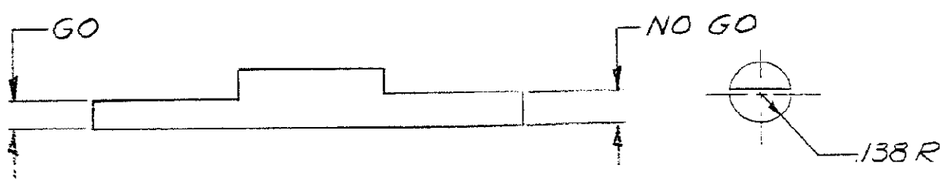

SUGGESTED PLUG GAGE DESIGN

1	–	5-21028-7	PIN	5
1	A	300389	PIN RETAINING	4
2	–	21045-6	RING-RETAINING	3
2	A	300388	PIN-RETAINING	2
4	–	21045-3	RING-RETAINING	1
-1	DWG SIZE	NUMBER	NAME	REMARKS	ITEM NO

LTR	REVISION RECORD	DR	CHK	DATE
A	SUP'D BY I.S. 1254	E.J.F.	E.J.F.	12-23-65
D-1	REVISED	PL		10-28-65

NUMBER 69354-1

REQUIRED PER ASSEMBLY

DESCRIPTION

©1965 BY AMP INCORPORATED. ALL RIGHTS RESERVED.
AMP PRODUCTS COVERED BY PATENTS AND/OR PATENTS PENDING.

CUSTOMER COPY REFERENCE ONLY

DR B. Shenfeld 3-19-65
CHK E.J.F. 4-23-65
DE
APP E.J.F. 4-23-65

MATERIAL AND FINISH —
WIRE — RANGE — INSULATION 8 — —
TOLERANCE EXCEPT AS NOTED ± .015 = 1° 0'
SCALE 1~1

AMP INCORPORATED HARRISBURG, PENNA.
CLASS —
TYPE "W" FLAG
LOC M B NO 69354-1 REV A
NAME HAND TOOL ASSEMBLY

THIS INFORMATION IS CONFIDENTIAL AND IS DISCLOSED TO YOU ON CONDITION THAT NO FURTHER DISCLOSURE IS MADE BY YOU TO OTHER THAN AMP PERSONNEL WITHOUT WRITTEN AUTHORIZATION FROM AMP INCORPORATED, HARRISBURG, PA.

DIMENSIONS IN INCHES. DO NOT SCALE PRINT.

PRINT DIST

AMP 1253 REV 7/60