THIS COPY IS PROVIDED ON A RESTRICTED BASIS AND IS NOT TO BE USED IN ANY WAY DETRIMENTAL TO THE INTERESTS OF PANDUIT CORP.

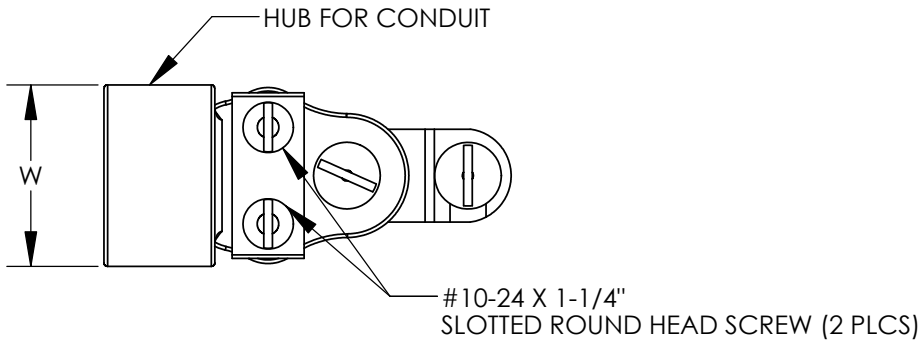

NOTES:

1. DIMENSIONS IN PARENTHESIS ARE MILLIMETERS.
2. MATERIAL: BODY - SOLID CAST BRONZE
   SCREWS - STEEL, ZINC PLATED
3. ALL DIMENSIONS SHOWN ARE NOMINAL.
4. PACKAGE QUANTITY: -1 = 1
5. FOR USE WITH RIGID CONDUIT.

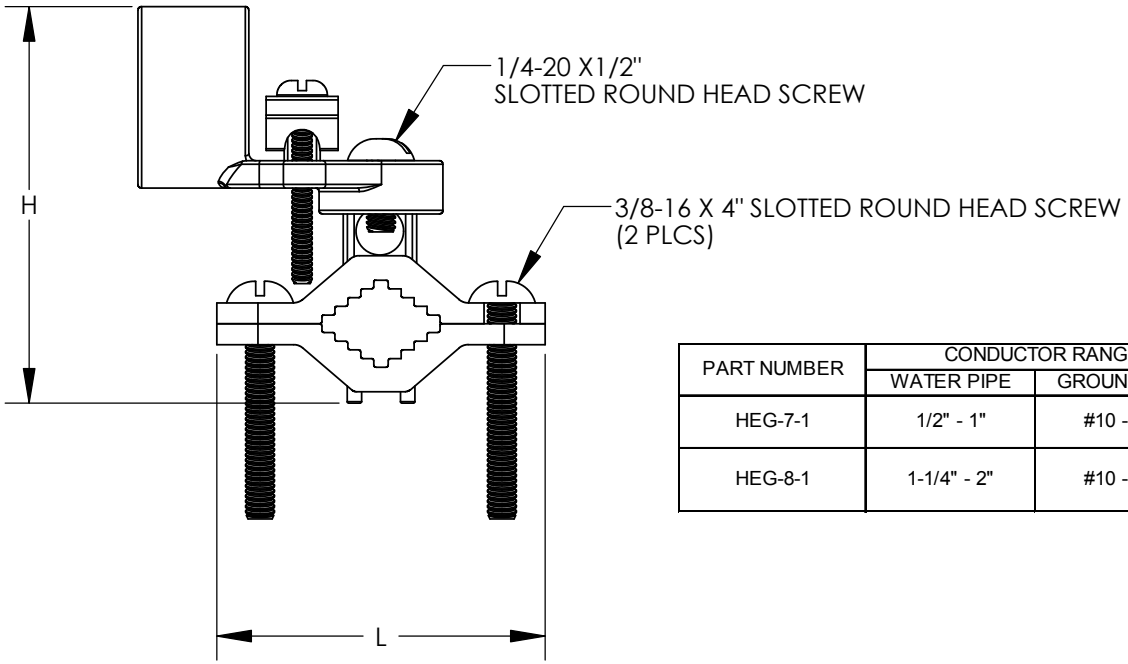

PART NUMBER	CONDUCTOR RANGE		CONDUIT SIZE	DIMENSIONS - IN [mm]		
	WATER PIPE	GROUND WIRE		H	L	W
HEG-7-1	1/2" - 1"	#10 - #2/0	3/4"	2.81 [71.4]	3.00 [76.2]	1.25 31.8]
HEG-8-1	1-1/4" - 2"	#10 - #2/0		3.56 [90.4]	3.63 [92.2]	1.25 [31.8]

C41716_01

REV	DATE	BY	CHK	DESCRIPTION	ECN	PM	APP
01	8/07	JHNU	LEM	REVISED PART DESCRIPTION IN TITLE BLOCK ADDED NOTE 5			
00	8/07	JHNU	LEM	DRAWING RELEASED			

PANDUIT CORP. TINLEY PARK, ILLINOIS

BRONZE GROUND CLAMP
(HEG-7-1, HEG-8-1)
CUSTOMER DRAWING

DRAWN BY	CHK'D	SCALE	DRAWING NO / CAD FILE
JHNU		NONE	C41716