THIS COPY IS PROVIDED ON A RESTRICTED BASIS AND IS NOT TO BE USED IN ANY WAY DETRIMENTAL TO THE INTERESTS OF PANDUIT CORP.

PANDUIT PART NO.	PKG.QTY.	CTN.QTY.	TAPE MATERIAL	"W" (WIDTH)	"T" (THICKNESS)	ROLL LENGTH
META-X	10 ROLLS	40 ROLLS	ALUMINUM	.495"±.010" [12.6±.25]	.006"±.0005" [.15±.01]	16 ft. 4.88 meters
METS4-X	10 ROLLS	40 ROLLS	304 GRADE STAINLESS STEEL	.495"±.010" [12.6±.25]	.005"±.0005 [.12±.01]	21 ft. 6.4 meters
METS3-X	10 ROLLS	40 ROLLS	316 GRADE STAINLESS STEEL	.495"±.010" [12.6±.25]	.005"±.0005 [.12±.01]	21 ft. 6.4 meters

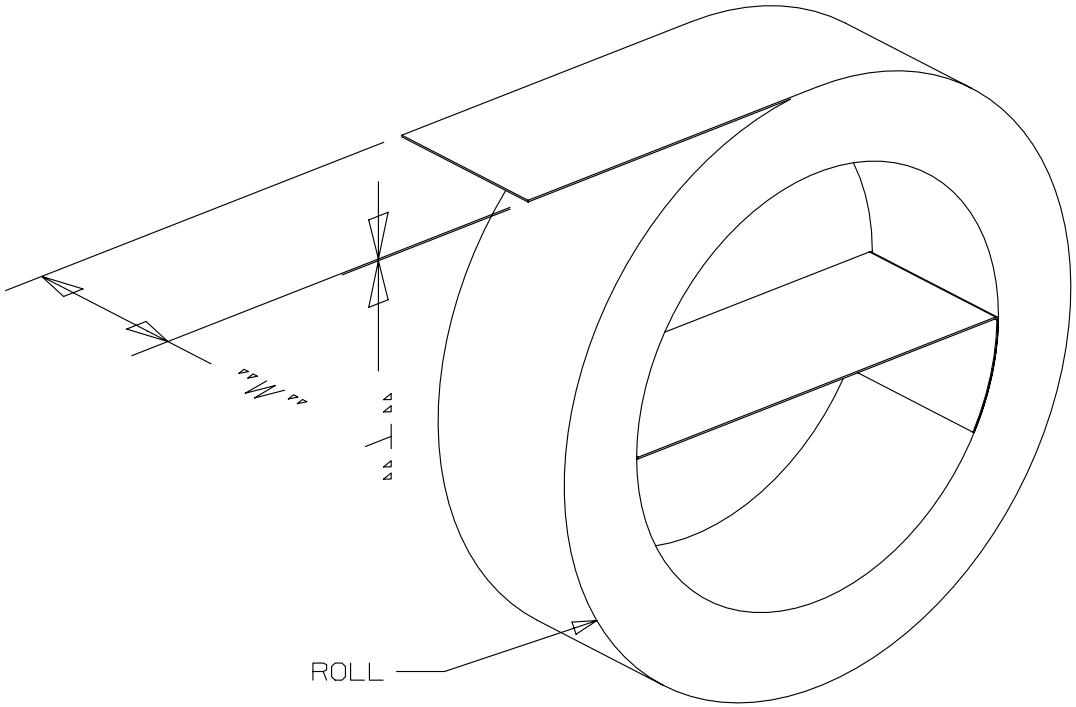

NOTE:

1. TAPE USED WITH PANDUIT EMBOSSING TOOL PART NO.MEHT.
2. BRACKETS [ ] DENOTES DIMENSION IN MILLIMETERS.

REV	DATE	BY	CHK	APR	DESCRIPTION	ECN

TITLE

ACCESSORY TAPE FOR MEHT PANDUIT EMBOSSING TOOL

CUSTOMER DRAWING

ITEM REVISION NAME: N41206BS/02

DATASET FILE NAME: N41206BS_DV/02A

UNLESS OTHERWISE SPECIFIED, DIMENSIONAL TOLERANCES ARE: IN [mm]

.X ± .1 [2.54] .XXX ± .005 [.127]

.XX ± .01 [.25] ANGLES ± 5 °

THIRD ANGLE PROJECTION

MATERIAL:

DRAWING NUMBER: N41206BS_DC

DRAWN BY	DATE	CHK	SCALE		SIZE
JAMB	12/04	EJD	4:1	SHT 1 OF 1	A