REV.	DATE	ECR NO.	DESCRIPTION
NC	01/04/00	XXXXXX	INITIAL RELEASE
A	04/06/06	XXXXXX	UPDATE DRAWING FORMAT
B	07/02/13	XXXXXX	CHANGE FERRULE LENGTH

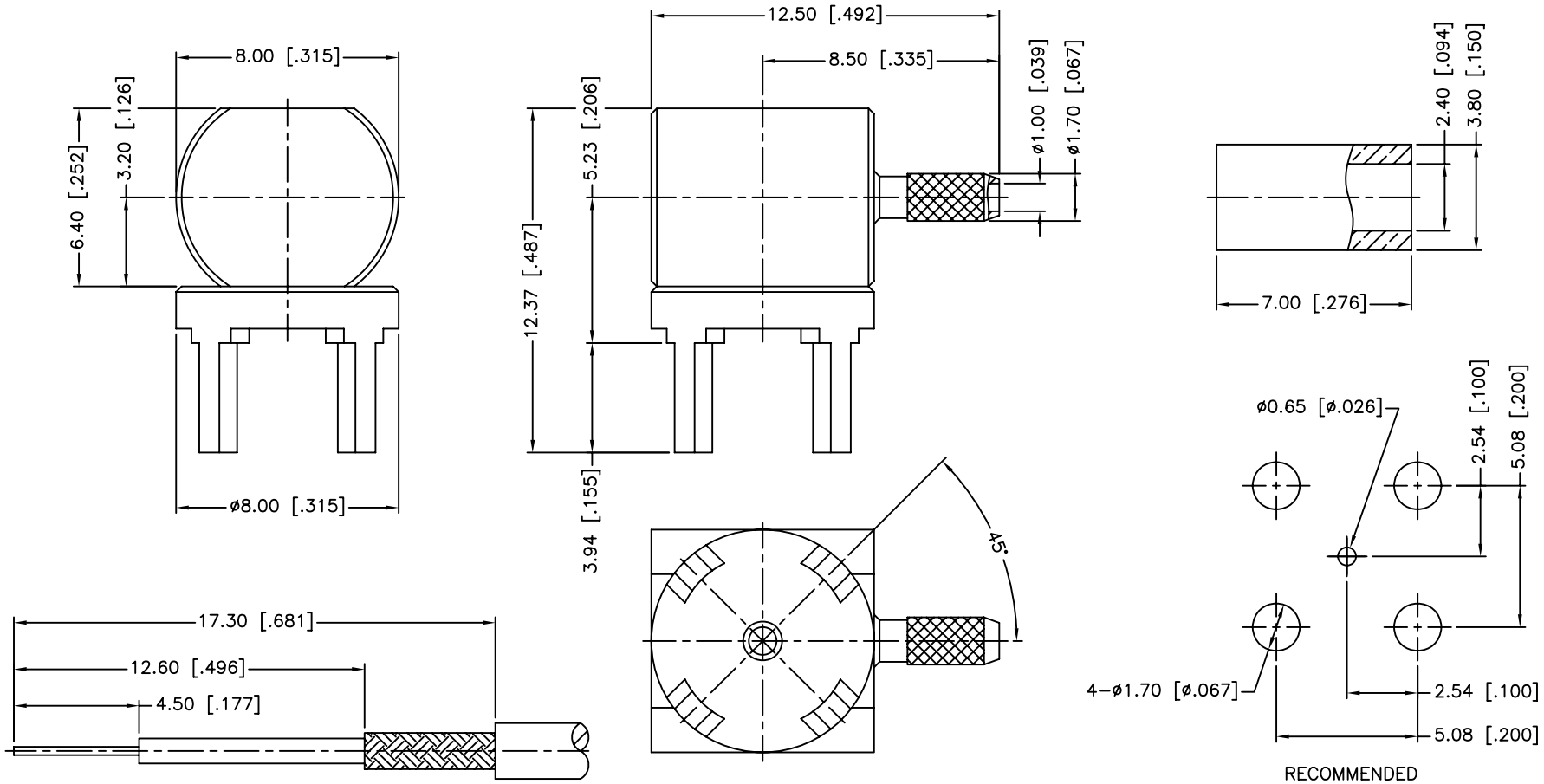

RECOMMENDED CABLE STRIPPING DIM'S

RECOMMENDED MOUNTING HOLE

1. CRIMPED FERRULE
   HEX CRIMP SIZE .128"

	DESCRIPTION	MATERIAL	FINISH	QTY
3	FERRULE	COPPER	GOLD	1
2	BODY	BRASS	GOLD	1
1	BARREL	BRASS	GOLD	1

UNLESS OTHERWISE SPECIFIED DIMENSIONS ARE IN MILLIMETERS. DIMENSIONS IN [ ] ARE IN INCHES AND FOR CUSTOMER REFERANCE ONLY.
UNLESS OTHERWISE SPECIFIED
TOLERANCES FOR MILLIMETERS ARE:
<0.5 ± 0.05mm
0.5 – 6mm ± 0.10mm
6 – 30mm ± 0.20mm
30 – 120mm ± 0.30mm
ANGLES ± 1°
UNLESS OTHERWISE SPECIFIED
TOLERANCES FOR INCHES ARE:
<.020 ± 0.002"
.020 – .236 = ± 0.004"
.236 – 1.180 = ± 0.007"
1.180 – 4.724 = ± 0.012"
ANGLES ± 1°

DO NOT SCALE DRAWING

APPROVALS		DATE
DRAWN	M.ZHANG	07/02/13
CHECKED		
ISSUED		
SHEET	1 OF 1	
CAD FILE	C:/CONNEX/142270.DWG	

Amphenol Connex

PART DESCRIPTION
R/A PCB CABLE TERMINAL
(FOR RG-178B/U, 196A/U)

PART NO. 142270

DWG. NO. 142270.DWG | REV. B | SIZE A | SCALE NA