AK2127-ENV

HEX CAVITY SIZES: .100 HEX x .093 WIDTH
.333 HEX x .400 WIDTH
.366 HEX x .110 WIDTH (2X)

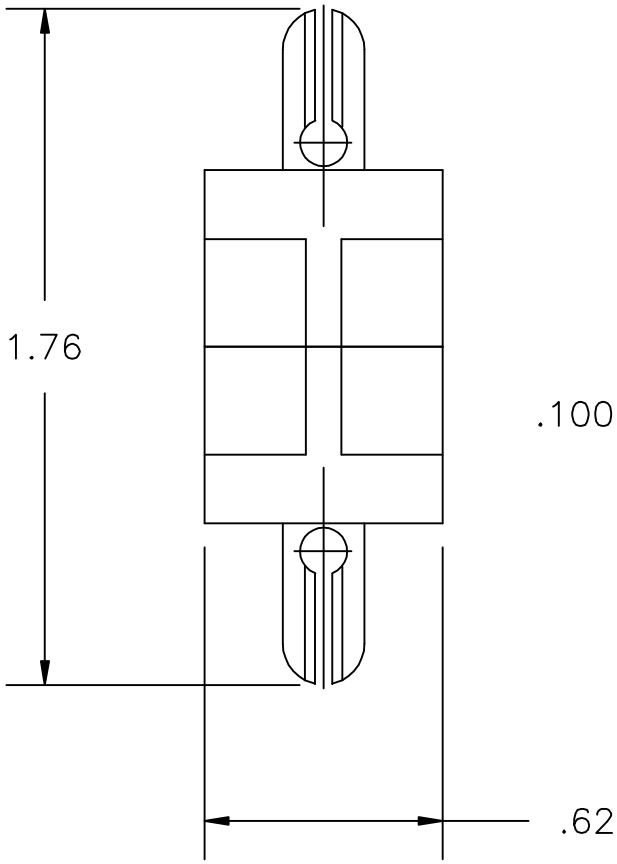

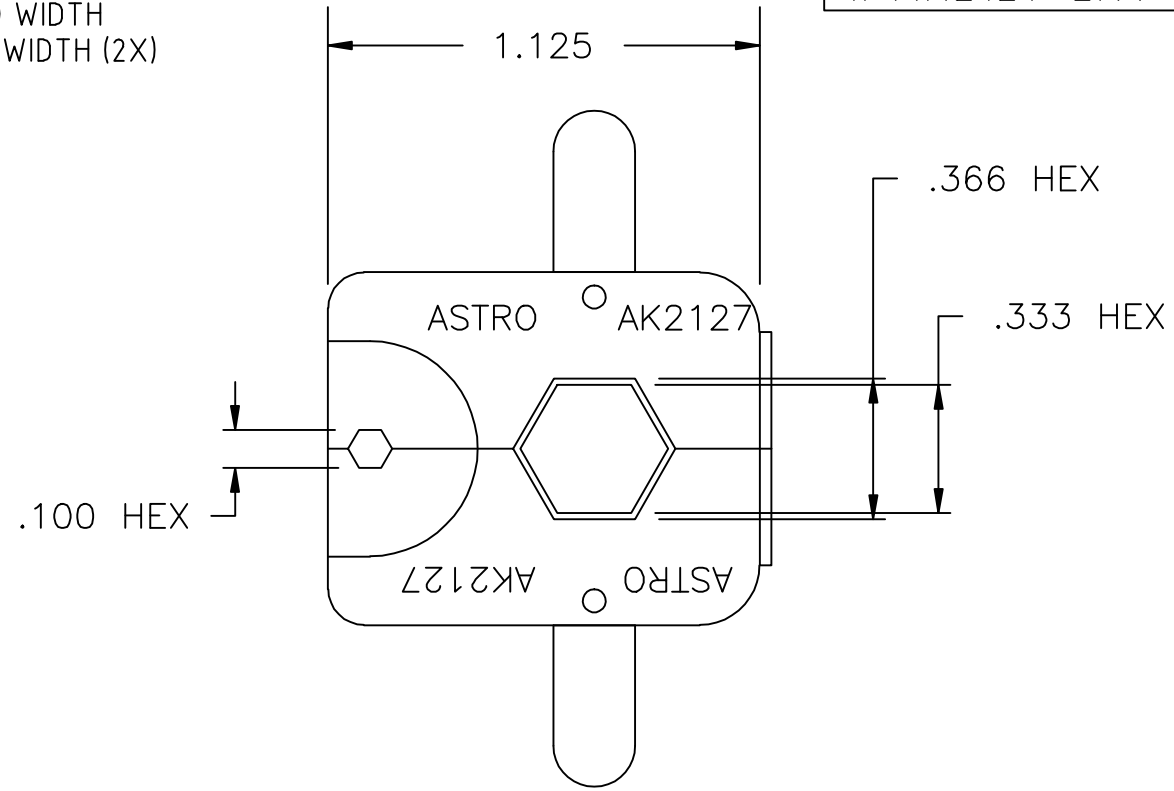

UNCONTROLLED DOCUMENT
WILL NOT BE UPDATED

NOTES:
1. THIS IS AN AUTOCAD DRAWING DO NOT CHANGE MANUALLY.
2. NOT FOR USE IN M22520/5-01 TOOL FRAME.

REV.	DESCRIPTION	BY	DATE	APR.
A	NEW RELEASE.	DYO	03-02-10	MMK

THESE DRAWINGS, SPECIFICATIONS OR OTHER DATA ARE AND REMAIN, THE PROPERTY OF ASTRO TOOL CORP. AND MUST BE RETURNED UPON REQUEST. THEY CONTAIN INFORMATION OWNED AND/OR DEVELOPED BY ASTRO AT ITS OWN PRIVATE EXPENSE AND MAY NOT BE USED, DUPLICATED OR DISCLOSED TO OTHERS, IN WHOLE OR IN PART FOR DESIGN, MANUFACTURE OR PROCUREMENT WITHOUT THE WRITTEN PERMISSION OF ASTRO TOOL CORP. EACH AND EVERY TIME.

SCALE: N.T.S.
DWN BY: DYO
DATE: 03-02-10
APPROVED:

UNLESS OTHERWISE SPECIFIED:
DECIMALS:
.XXX ± .005
.XX ± .010
.X ± .030
ANGLES:
± 1°

ASTRO TOOL CORP.
21615 S.W. TUALATIN VALLEY HWY., BEAVERTON OR 97006
CAGE 58164

DESCRIPTION: ENVELOPE DRAWING: AK2127
DIE SET, SPECIAL

PART NO. A AK2127-ENV