THIS COPY IS PROVIDED ON A RESTRICTED BASIS AND IS NOT TO BE USED IN ANY WAY DETRIMENTAL TO THE INTERESTS OF PANDUIT CORP.

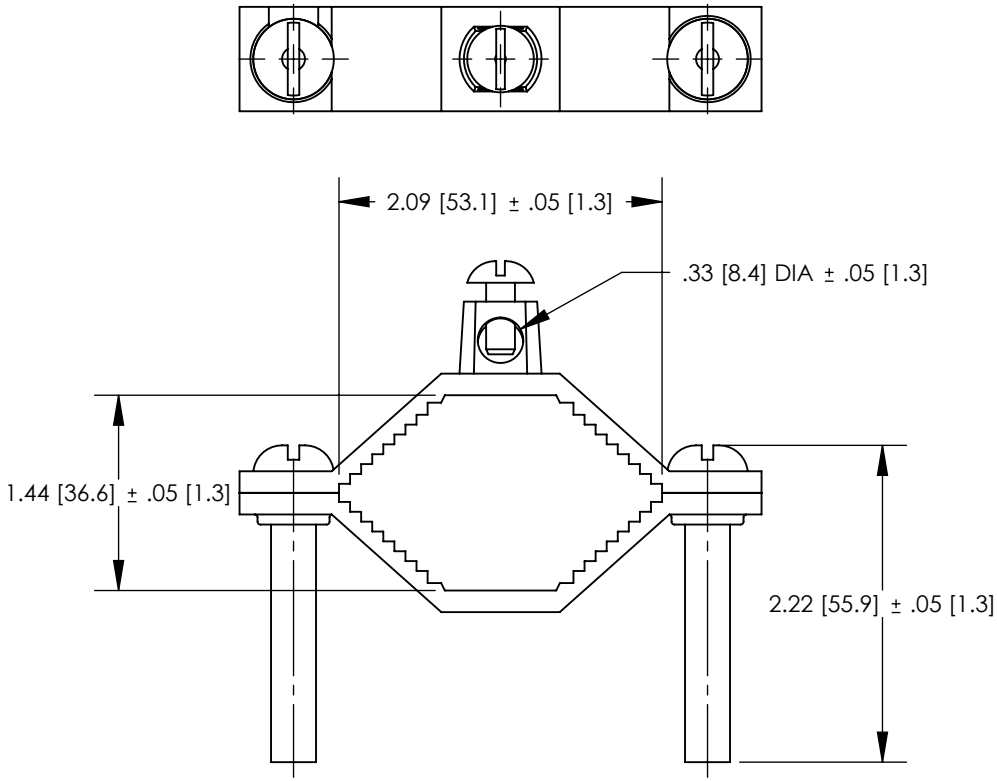

NOTES:

1. MATERIAL:
   BODY - BRONZE (GUN METAL)
   SCREW - PHOS. BRONZE (GPC2-2D)
   STEEL, ZINC PLATED (GPC2-2)
2. PARTS ARE cULus LISTED TO UL467 AS GROUNDING & BONDING EQUIPMENT.
3. RATED FOR DIRECT BURIAL (GPC2-2D ONLY)
4. SEE WWW.PANDUIT.COM FOR PART NUMBER SUFFIX DESIGNATION FOR PACKAGE SIZE.

C UL US

GPC2-2D ONLY

PART NUMBER	DESCRIPTION	WATER PIPE	GROUNDING WIRE
GPC2-2	GROUND CLAMP BARE WIRE	1-1/4" - 2"	10 - 2 STR
GPC2-2D	GROUND CLAMP BARE WIRE DIRECT BURIAL	1-1/4" - 2"	10 - 2 STR

REV	DATE	BY	CHK	APR	DESCRIPTION	ECN
00	7/12	JHNU	SRBI	RGB	DRAWING RELEASED	10J018AJ-JC

TITLE
BRONZE GROUND PIPE CLAMP - 1-1/4"-2"
CUSTOMER DRAWING

ITEM REVISION NAME: 10J018AJ/00

DATASET FILE NAME: 10J018AJ-JC/00.SLDDRW

UNLESS OTHERWISE SPECIFIED,
DIMENSIONAL TOLERANCES ARE: IN [mm]
.X ± .XXX ±
.XX ± ANGLES ±

THIRD ANGLE PROJECTION

PANDUIT™

MATERIAL: SEE NOTES

DRAWING NUMBER: 10J018AJ-JC

DRAWN BY	DATE	CHK	SCALE	SHEET	SIZE
JHNU	7/12	SRBI	N/A	SHEET 1 OF 1	A