THIS DRAWING IS UNPUBLISHED. RELEASED FOR PUBLICATION -.-- .
© COPYRIGHT - BY TYCO ELECTRONICS CORPORATION. ALL RIGHTS RESERVED.

LOC	DIST
AA	22

REVISIONS

P	LTR	DESCRIPTION	DATE	DWN	APVD
	B	REV PER ECO-08-028276	06MAR2009	VL	LR

MECHANICAL:

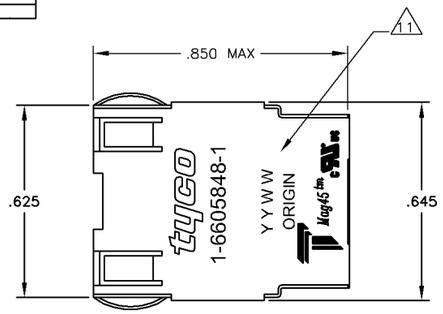

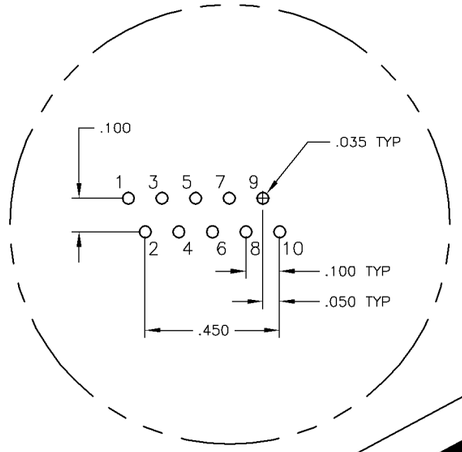

Pin Designations

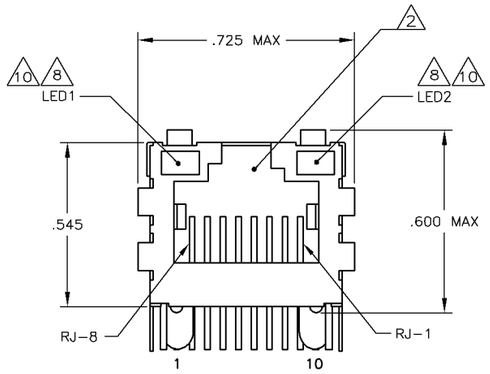

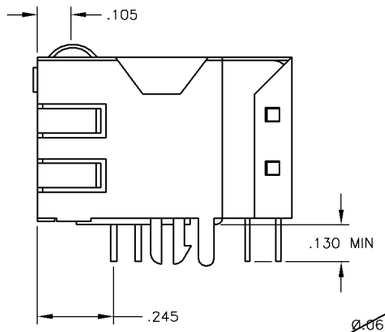

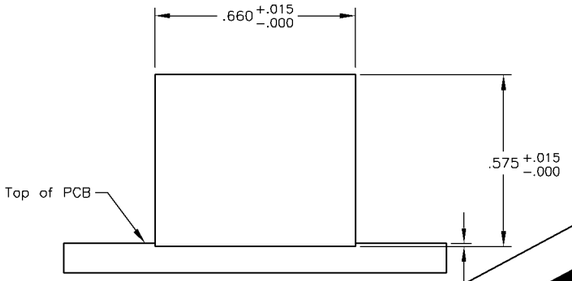

Suggested Panel Cutout

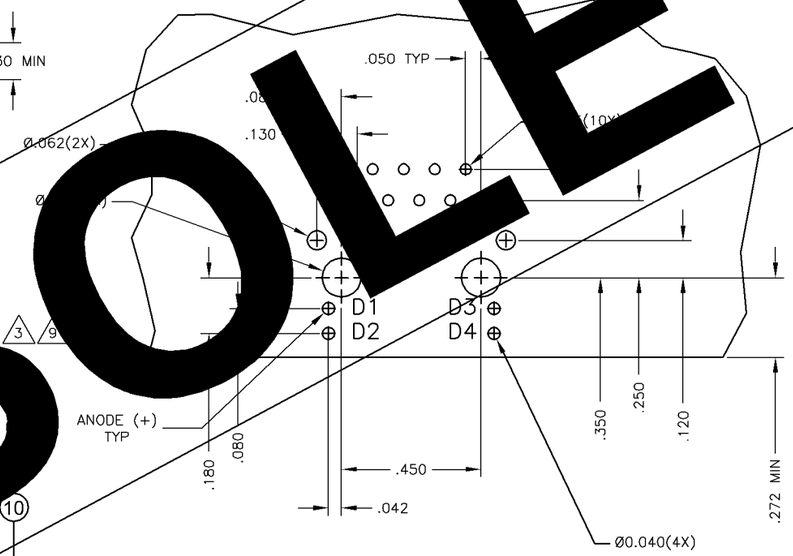

Suggested PCB Layout
(Component Side)

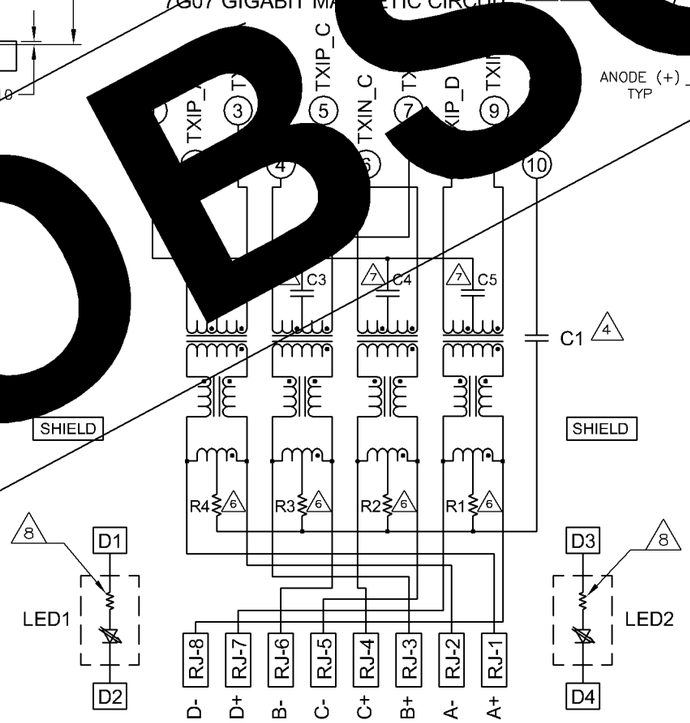

1. MATERIALS:
-HOUSING - THERMOPLASTIC PET POLYESTER FLAMMABILITY RATING UL 94V-0.
-SHIELD - .010" THICK, C26800 BRASS PREPLATED WITH 30µINCH MIN SEMI-BRIGHT NICKEL, SOLDER TABS POST DIPPED WITH 100µINCH MIN SAC SOLDER.
-MOD JACK CONTACTS - 0.0157" x 0.018" PHOSPHOR BRONZE, 50µINCH MIN OVERALL NICKEL UNDERPLATE, WITH SELECT 50µINCH MIN HARD GOLD FINISH PLATE. SOLDERTAILS WITH 100µINCH MIN MATTE TIN AND/OR SAC SOLDER DIP.
-LIGHT EMITTING DIODE(LED) - DIFFUSED EPOXY LENS, .020" x .020" CARBON STEEL WIREFRAME LEA[illegible]-PLATED WITH 80µINCH SILVER OVER 40µINCH NICKEL UNDERPLAT[illegible]INCH COPPER UNDERPLATE, POST-PLATED WITH 100µIN[illegible]E TIN AND/OR SAC SOLDER DIP OR PURE TIN SOLDER DIP.

2. [illegible]R CAVITY CONFORMS TO FCC RULES AND REGULATIONS PART 68, SUB [illegible]

3. MA[illegible]
-IMP[illegible]MS
-TURN[illegible](CHIP:CABLE): 1:1 ALL FOUR PAIRS
-OPEN [illegible]DUCTANCE (OC[illegible] MIN @100kHz, 0.1VRMS, 8mADC [illegible]OM 0°C T[illegible] FOUR PAIRS
-ALL FOUR [illegible]
-PERFORMA[illegible]
INSERTION [illegible]: 1.1dB MAX FROM 0.5MHz TO 100MHz
RETURN LOS[illegible]RL): 18dB MIN FROM 0.5MHZ TO 40MHz
12-20LOG(f/80)dB MIN FROM 40.1MHz TO 100MHz
CROSSTALK ATTENUATION: 35dB MIN FROM 0.5MHz TO 40MHz
33-20*LOG(f/50)dB MIN FROM 40.1MHz TO 100MHz
COMMON MODE REJECTION RATIO (CMRR): 30dB MIN FROM 0.5MHz TO 100MHz
-ISOLATION VOLTAGE: COMPLIES WITH IEEE802.3 2002, PARA 40.6.1.1, ITEM a or b.

4. C1 IS A 1000 pF, 2kV DECOUPLING CAPACITOR.

5. OPERATING TEMPERATURE: FROM 0° - +70°C.

6. R1-R4 = 75 OHMS, 1/16 W, 5% RESISTORS.

7. C2-C5 = 0.1µF, 50V CAPACITORS.

8. LED COMPLIANT WITH IEC60825-1 SAFETY OF LASER PRODUCTS. WHEN OPERATED UP TO 20 mA. THE 250 OHM RESISTOR IS INCLUDED IN THE LEDS.

9. THE MAGNETICS ARE SYMMETRIC, AND SUPPORT AUTO-MDI/MDIX.

10. LED PEAK WAVELENGTH: GREEN(λ_d) = 565nm.

11. TRADEMARK, PART NUMBER, DATE CODE, COUNTRY OF ORIGIN AND AGENCY APPROVAL MARKING IN APPROXIMATE LOCATION SHOWN.

OBSOLETE

GREEN	GREEN	1-6605848-1
LED1 8	LED2 8	PART NUMBER

THIS DRAWING IS A CONTROLLED DOCUMENT.

DIMENSIONS: INCHES

TOLERANCES UNLESS OTHERWISE SPECIFIED:
0 PLC ± -
1 PLC ± -
2 PLC ± .010
3 PLC ± .005
4 PLC ± -
ANGLES ± -

MATERIAL 1
FINISH 1

DWN L. VARELA - DOCKS 07MAR2005
CHK D. FAROLE 07MAR2005
APVD D. FAROLE 07MAR2005
PRODUCT SPEC 108-2100
APPLICATION SPEC -
WEIGHT -

Tyco Electronics Corporation
Harrisburg, PA 17105-3608

NAME 1X1 MAG45(TM), MODULAR JACK, 7G2 SCHEMATIC, 7G07 GIGABIT MAGNETIC CIRCUIT (10 PIN), SHIELDED, DECOUPLING CAPACITOR, WITH RESISTOR LEDS

SIZE	CAGE CODE	DRAWING NO	RESTRICTED TO
A1	00779	C-6605848	-

CUSTOMER DRAWING SCALE NTS SHEET 1 OF 1 REV B

AMP 4805 REV 31MAR2000