THIS DRAWING IS UNPUBLISHED. RELEASED FOR PUBLICATION ,1998 .
© COPYRIGHT 1998 BY AMP INCORPORATED.ALL RIGHTS RESERVED.

LOC	DIST

REVISIONS 変更

P	LTR	DESCRIPTION	ECN	DATE	DWN	APVD
	O	RELEASED	FJ00-2315-98	24DEC'98	N.S	T.Y
	A	REVISED	FJ00-2093-99	6 DEC '99	N.S	[illegible]

-2 ; AS SHOWN

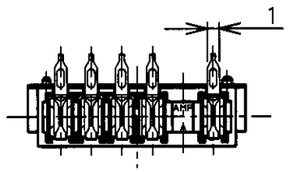

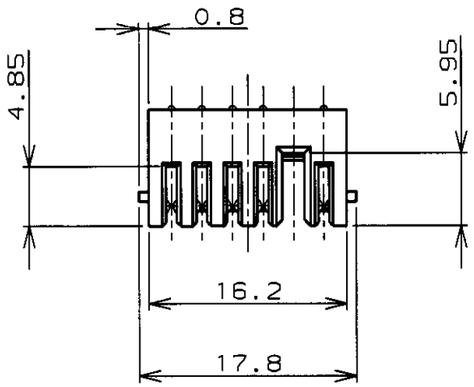

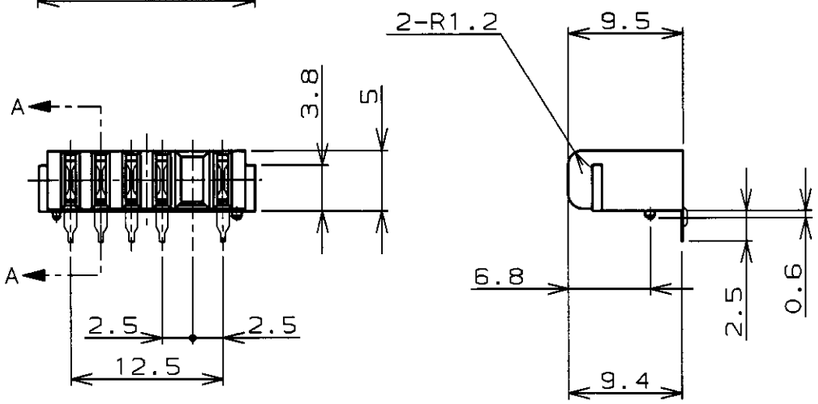

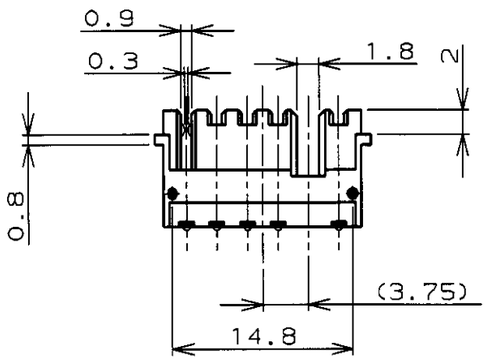

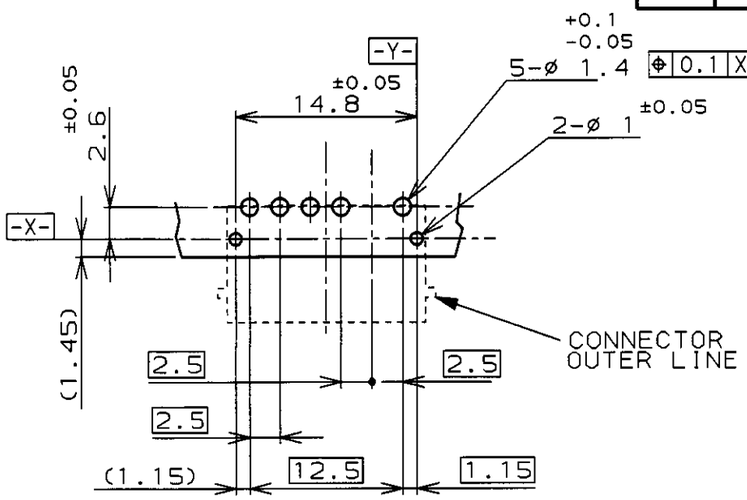

基板取付推奨寸法
REOMMENDED P.C.BOARD LAYOUT
P.C.BOARD THK 0.8~1.2
(VIEW FROM CONNECTOR MOUNTING SIDE)

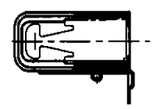

SECT A-A

注記

1. 材料 ハウジング : 熱可塑性樹脂 UL94V-0
   色 ; 黒
   コンタクト : 銅合金
2. 仕上げ コンタクト : Ni 下地めっき
   接触部 Pd-Niめっき
   接触部 Au フラシュめっき
   半田付け部 Sn-Pb めっき

NOTES

1. MATERIAL HOUSING : THERMOPLASTIC RESIN, UL94V-0
   COLOR ; BLACK
   CONTACT : COPPER ALLOY
2. FINISH CONTACT : Ni ALL OVER UNDER PL
   Pd-Ni PL. AT CONTACT AREA
   Au FLASH PL. AT CONTACT AREA
   TIN-LEAD PL. AT LEAD AREA

THIS DRAWING IS A CONTROLLED DOCUMENT FOR AMP INCORPORATED. IT IS SUBJECT TO CHANGE AND THE CONTROLLING ENGINEERING ORGANIZATION SHOULD BE CONTACTED FOR THE LATEST REVISION.

DIMENSIONS: 単位：粍 mm

TOLERANCES UNLESS OTHERWISE SPECIFIED
一般公差
10㎜ : ±0.2
30㎜ >10 : ±0.25
100㎜ >30 : ±0.3
ANGLE : ±3°

MATERIAL 材料 1
FINISH 仕上 2

DWN	N.SASAME	24/DEC/'98
CHK	S.ABE	24/DEC/'98
APVD	T.YAMADA	24/DEC/'98
PRODUCT SPEC 製品規格	108-5652	
APPLICATION SPEC 取付適用規格	T1	
WEIGHT	T1	

CUSTOMER DRAWING

AMP 日本エー・エム・ピー株式会社 Kawasaki, Japan

NAME 名称: RECEPTACLE ASSEMBLY FOR 2.5mm PITCH 2ND BATTERY CONNECTOR

SIZE	CAGE CODE	DRAWING NO 番号	RESTRICTED TO
A3	00779	C- 1318430	—

SCALE 尺度 2:1 SHEET 1 OF 1 REV A

参考図面