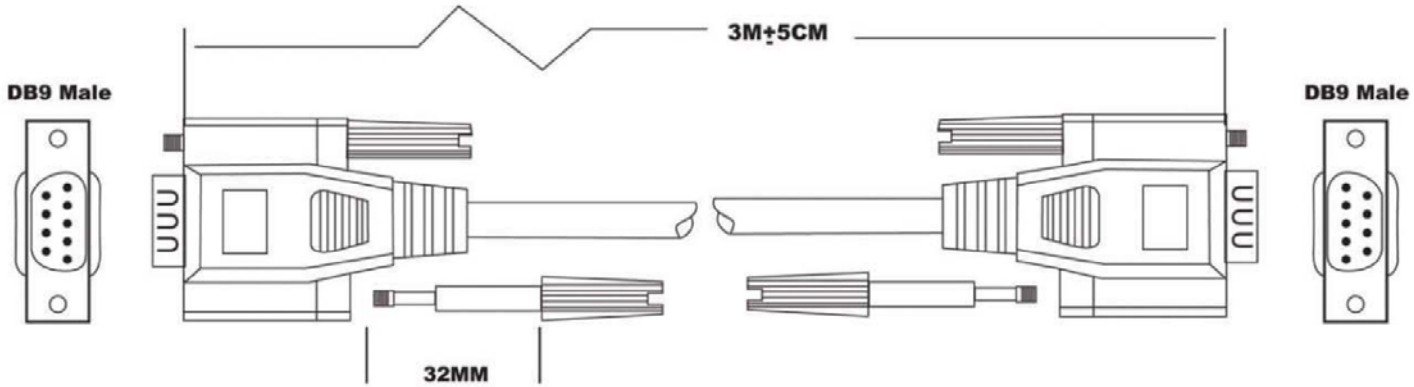

Configuration:

DB9M		DB9M
1	———	1
2	———	2
3	———	3
4	———	4
5	———	5
6	———	6
7	———	7
8	———	8
9	———	9
Shield	———	Shield

Material:

1.Cable: #28 9C+1+AL/MY (Beige PVC Jacket) O.D:5.0MM
2.Both connectors with normal type
3.Thumbscrew: #4-40UNC Type
4.Outter Molded with Beige PVC

Notes:

1.Total Length: 3M±5CM
2.Color: Beige
3.Molded Type

RoHS Complaint

Scale	1:1						Name	Item No. AK174-3
TOLERANCE						Drawn	11.15.11	Chappell
X.X	±0.40					Approved		Title Connection Cable for 9 Pin Interface Serial, Molded Hoods
X.XX	±0.25							
X.XXX	±0.15							Drawing No. rev00
Angle	±3°							
			Modification	Date	Name			Replace / Sheet

ASSMANN WSW components