SHEET OF

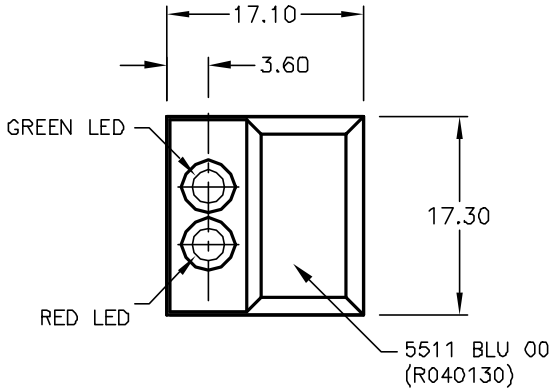

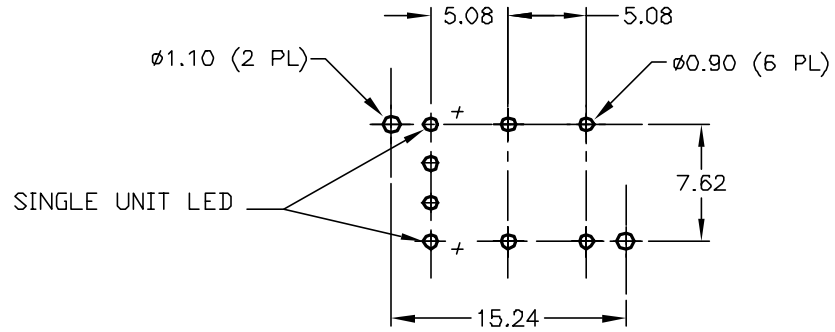

RECOMMENDED P.C.B. LAYOUT

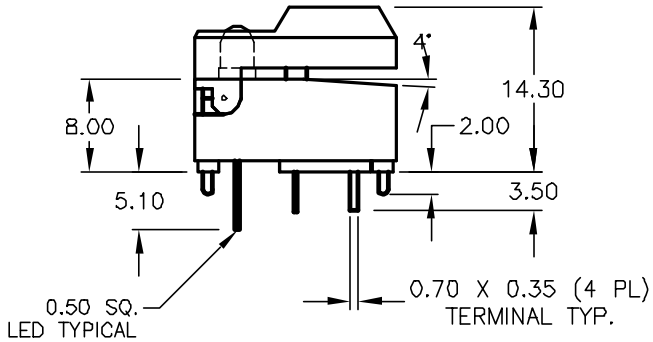

LED SPECIFATION	SYMBOL	RED L.E.D MAX.	RED L.E.D MIN.	RED L.E.D TYP.	GREEN L.E.D MAX.	GREEN L.E.D MIN.	GREEN L.E.D TYP.	UNITS
POWER DISSIPATION	P_D	80	--		100	--		mW
FORWARD VOLTAGE	V_F	2.8	1.9	2.2	2.8	1.9	2.2	V
REVERSE VOLTAGE	V_R	5			5			V
EMISSION WAVELENGTH	λ_P			695			570	nm
AVE. FORWARD CURRENT	I_{AF}	30	--		30	--		mA
LUMINOUS INTENSITY	I_V		0.7	22		6.0	15	mcd

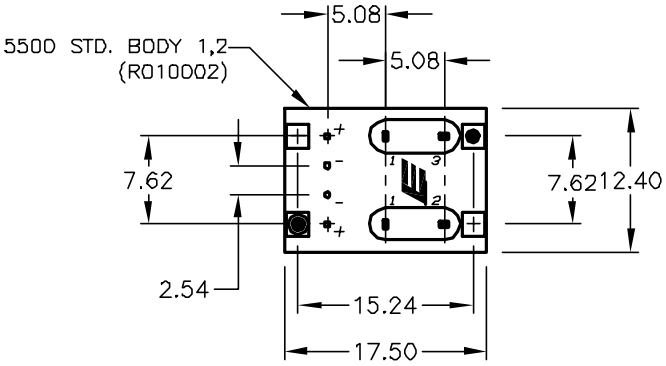

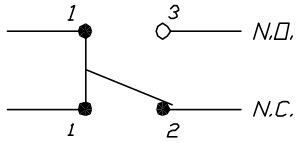

CIRCUIT: SPDT
CONTACT CONFIGURATION

NOTES:

1. ALL DIMENSIONS IN MM
2. GENERAL TOLERANCE: X.X=±0.4
   X.XX=±0.25
3. TERM. NO. FOR REF. ONLY
4. RATING: 12mA @24V
5. FIXED CONTACT/MOVING CONTACT:
   COPPER ALLOY W/GOLD PLATE
6. CONTACT BOUNCE: <5m SEC.
7. CONTACT RESISTANCE: <50milli-OHMS

REV.	ECN No.	DESCRIPTION	DATE	CHKD
A	12128	RELEASED FOR PRODUCTION	5/8/02	CJB

THE INFORMATION CONTAINED IN THIS DOCUMENT IS PROPRIETARY TO E-SWITCH AND IS NOT TO BE COPIED OR TRANSFERRED

E-SWITCH®

TITLE 5511-M-4-1,2

SCALE	DATE	DR	DWG	REV
1.5:1	5/8/02	CJB	XR0218P	A