MICRO SWITCH
a Honeywell Division
FED. MFG. CODE 91929

SWITCH-ENCLOSED

CATALOG LISTING
BFL1-BL1

NOTES
1 - 3X 6-32 UNC PRESSURE PLATE TERMINAL SCREWS
2 FURNISHED UNASSEMBLED
3 SWITCH WILL OPERATE AND RELEASE WITHIN THIS TRAVEL

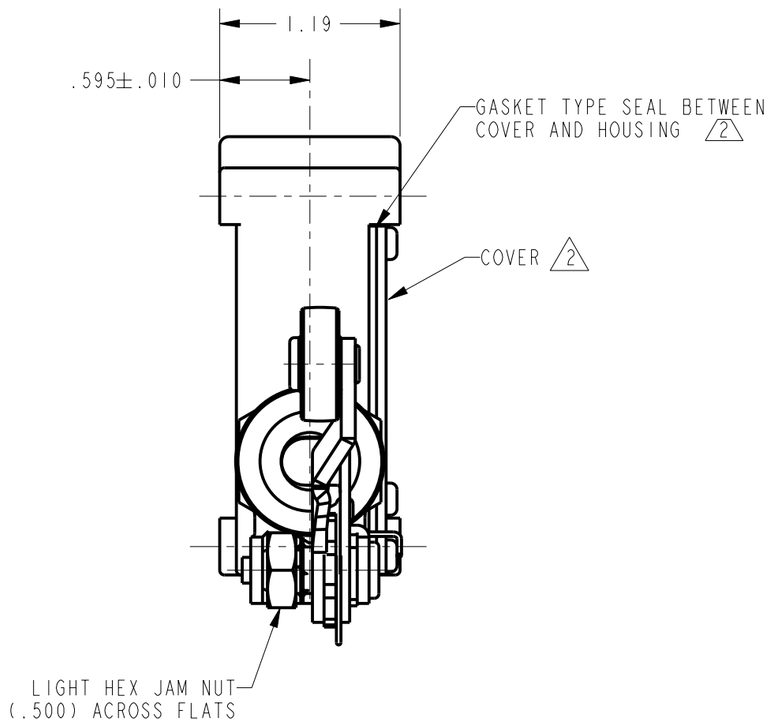

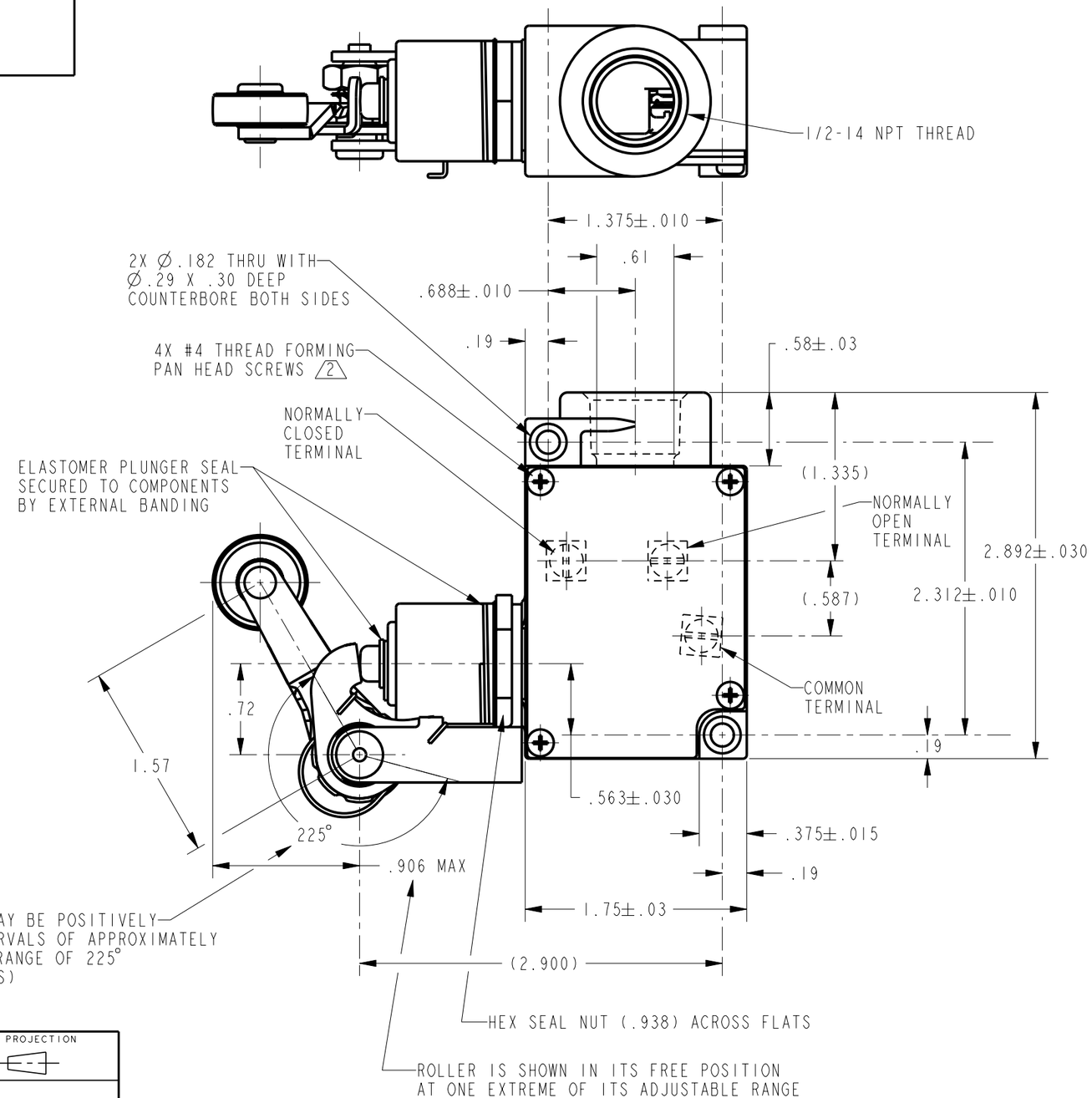

THIS DRAWING COVERS A PROPRIETARY ITEM AND IS THE PROPERTY OF MICRO SWITCH, A DIVISION OF HONEYWELL. THIS DRAWING IS NOT TO BE COPIED OR USED WITHOUT THE APPROVAL OF MICRO SWITCH

THIRD ANGLE PROJECTION

SCALE FULL

DO NOT SCALE PRINT

UNLESS OTHERWISE SPECIFIED TOLERANCES ARE

ONE PLACE	(.0)	±.030
TWO PLACE	(.00)	±.015
THREE PLACE	(.000)	±.005
ANGLES		±

WEIGHT

ANSI Y14.5M-1982 APPLIES

CHARACTERISTICS

OPERATING FORCE .....38 OZ MAX
TOTAL TRAVEL .....3 .370 MIN
DIFFERENTIAL TRAVEL ..... .065 NOM

ELECTRICAL DATA

CONTACT ARRANGEMENT
S P D T

L156
11A 1/3HP 125, 250, 277 VAC

1/2A 125 VDC, 1/4A 250 VDC
4A 125 VAC "L"

PTC/CAD 3D				
DRAWN	TRF	06SEP01		
CHECK			SAV	06SEP01
CHECK				
CHECK				
CHECK				
REVISIONS				
ISSUE	1			
PAGE	1 OF 1			
CATALOG LISTING	BFL1-BL1			
RELEASE NO.	203802			
REPLACES				