PART NAME	PUSH BUTTON BOX - 1 HOLE (22MM)	PART No.	PBB-11815-1	REVISION DATE	12-3-15

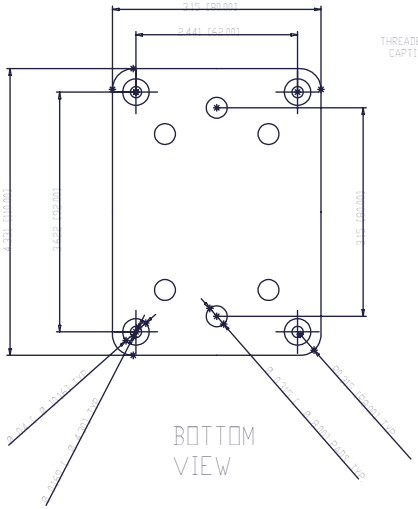

BOTTOM VIEW

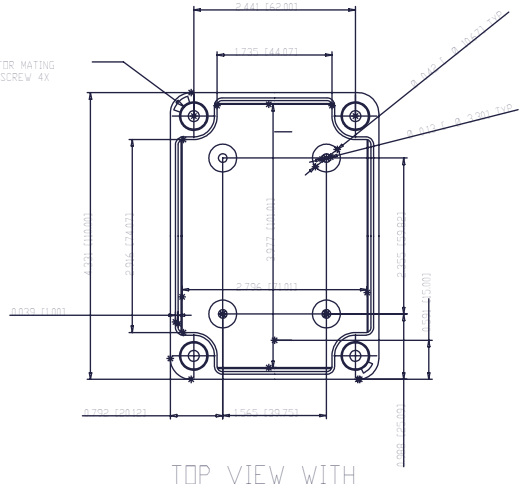

TOP VIEW WITH COVER REMOVED

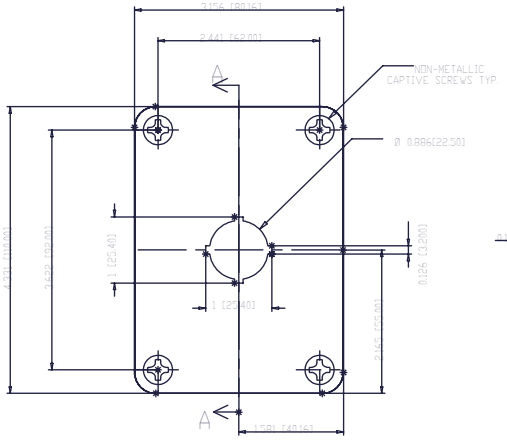

TOP VIEW WITH COVER

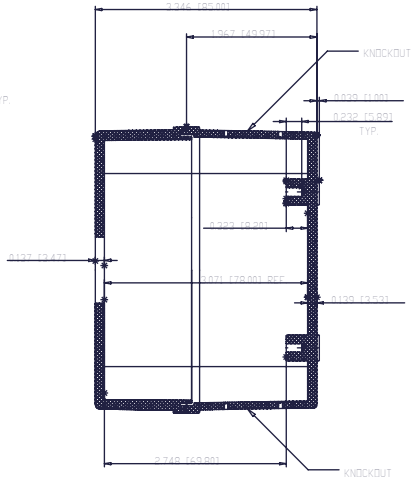

SECTION A-A

NOTES:

1- MATERIAL: BODY- GRAY POLYCARBONATE, 10% GLASS FIBER FILLED
COVER - GRAY POLYCARBONATE

2- IP-67 TUV AND UL-94V0 RATING

3- UL508/NEMA TYPE 4X AND TYPE 6 LISTED #E343339

4- CONTINUOUS GASKET IN COVER

5- FOUR NON-METALLIC CAPTIVE SCREWS PROVIDED

6- ALL OTHER DIMENSIONS HAVE +/- .039[.1mm] TOLERANCE

7- DIMENSIONS ARE INCH[MM]

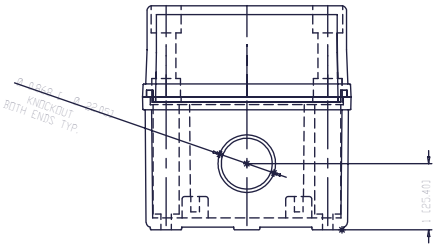

FRONT VIEW

OPTIONAL ACCESSORIES
MOUNTING BRACKET KIT (STAINLESS STEEL) - #NBX-10922
MOUNTING BRACKET KIT (PLASTIC) - #PIX-4117