THIS DRAWING IS UNPUBLISHED. RELEASED FOR PUBLICATION -,- .
© COPYRIGHT - BY TYCO ELECTRONICS CORPORATION. ALL RIGHTS RESERVED.

| LOC | DIST |
|---|---|
| AJ | — |

REVISIONS

| P | LTR | DESCRIPTION | DATE | DWN | APVD |
|---|---|---|---|---|---|
| | A | RELEASE PER ECN 0S14-0477-02 | 15NOV02 | GM | GM |

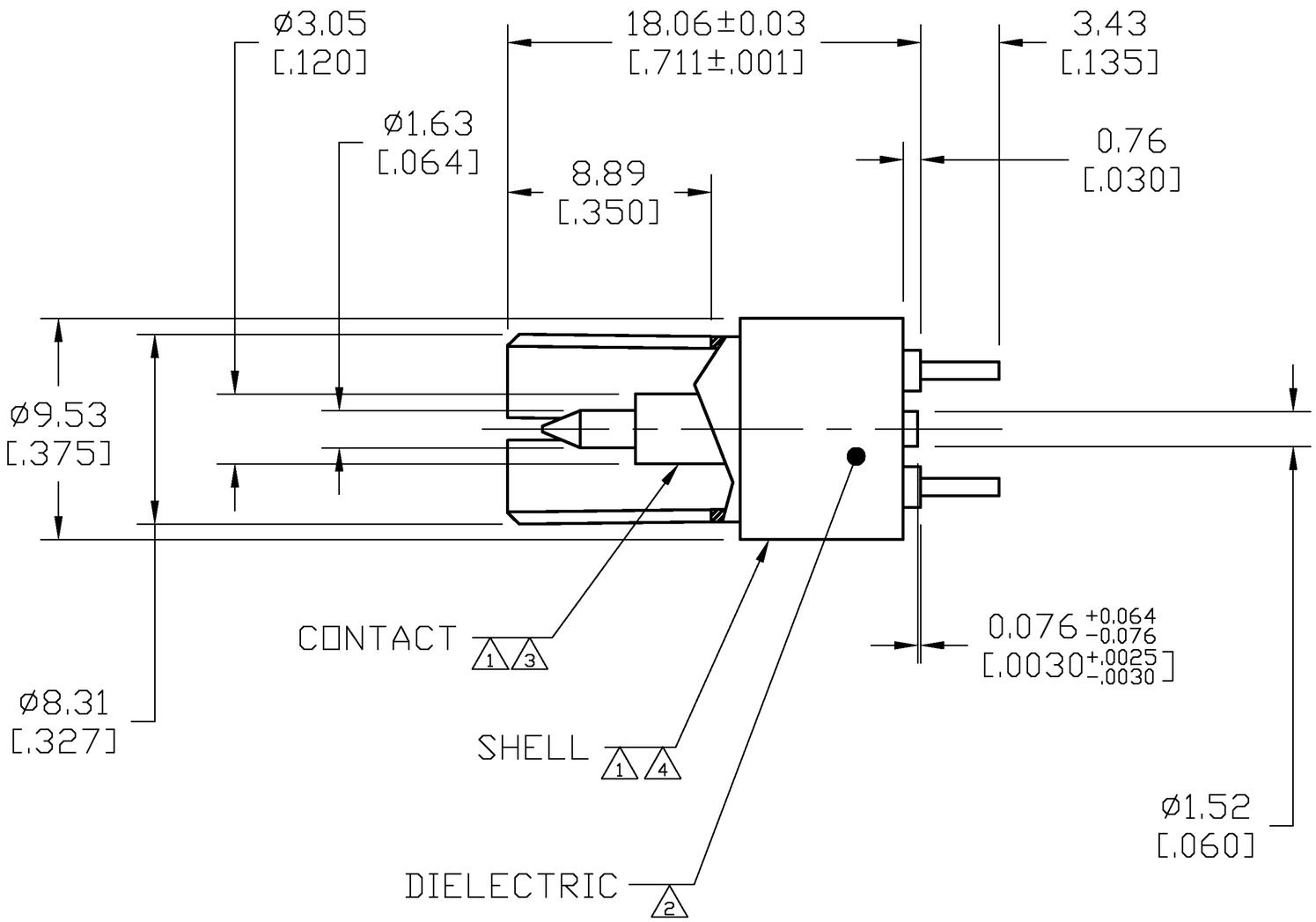


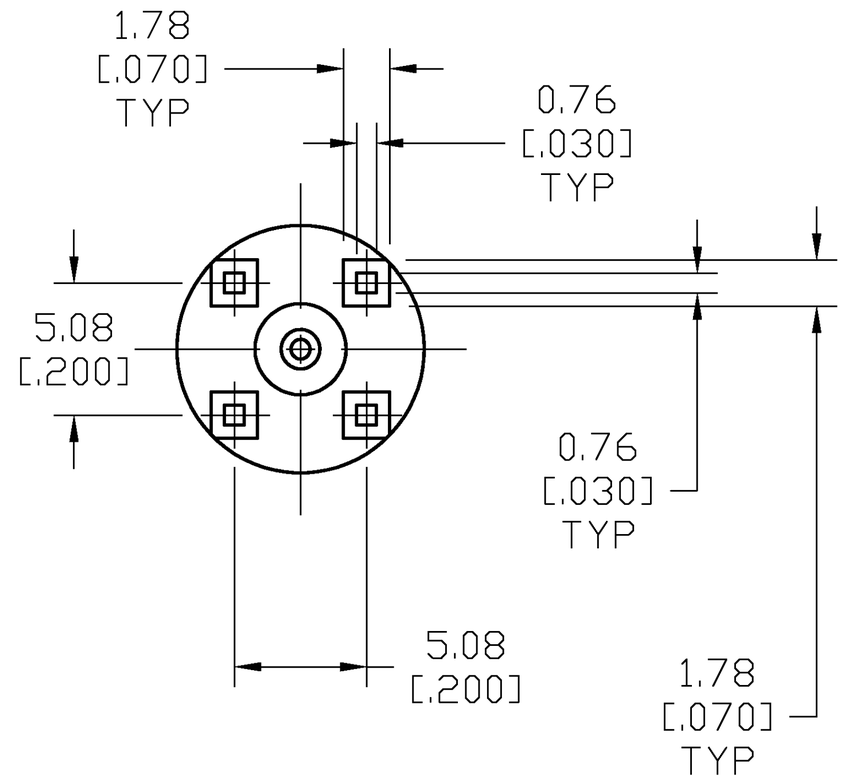


1. BRASS PER QQ-B-626
2. PTFE PER ASTM-D-1710
3. GOLD PLATE PER MIL-G-45204
4. TIN PLATE PER MIL-T-10727
5. INTERFACE PER MIL-C-39012, WITHOUT COUPLING NUT.

1274531-1 PART NUMBER

THIS DRAWING IS A CONTROLLED DOCUMENT.

DIMENSIONS: MM [INCHES]

TOLERANCES UNLESS OTHERWISE SPECIFIED:
0 PLC ± –
1 PLC ± –
2 PLC ± –
3 PLC ± 0.13 [.005]
4 PLC ± –
ANGLES ± –

MATERIAL –
FINISH –

DWN G. MICHAEL 07AUG2002
CHK G. MICHAEL 11/15/02
APVD G. MICHAEL 11/15/02
PRODUCT SPEC –
APPLICATION SPEC –
WEIGHT –

Tyco Electronics Corporation
Middletown, PA 17057

NAME
N SERIES
BLINDMATE
PCB

| SIZE | CAGE CODE | DRAWING NO | RESTRICTED TO |
|---|---|---|---|
| A2 | 00779 | C-1274531 | – |

CUSTOMER DRAWING | SCALE 1:1 | SHEET 1 OF 1 | REV A

AMP 1471-9 REV 31MAR2000

G:\RF\Prod_eng\Product Drawings\N Series\1274531-1\