DRAWING MADE IN THIRD ANGLE PROJECTION

THIS DRAWING IS UNPUBLISHED. | RELEASED FOR PUBLICATION , 19 .

© COPYRIGHT 19 BY AMP INCORPORATED, HARRISBURG, PA. ALL INTERNATIONAL RIGHTS RESERVED. AMP PRODUCTS MAY BE COVERED BY U.S. AND FOREIGN PATENTS AND/OR PATENTS PENDING.

LOC G DIST 14

REVISIONS

P	F	ZONE	LTR	DESCRIPTION	DATE	APPROVED
✓	✓		L	REDRAWN, REVISED PER G-1478, G-1175, P85-0115 & P85-0116	11/26/86	rpm
✓	✓		M	OBSOLETE 2--8 PER G-2393	8/24/87	SS rpm
	✓		N	REV PER G-3914	JT 10/10/88	AG
	✓		P	OBS. 2--3, 2--7 G-3755 DKS	3-29-89	AG
	✓		R	OBS 2-1, 2-4 G-5160	9/4/90	DKS

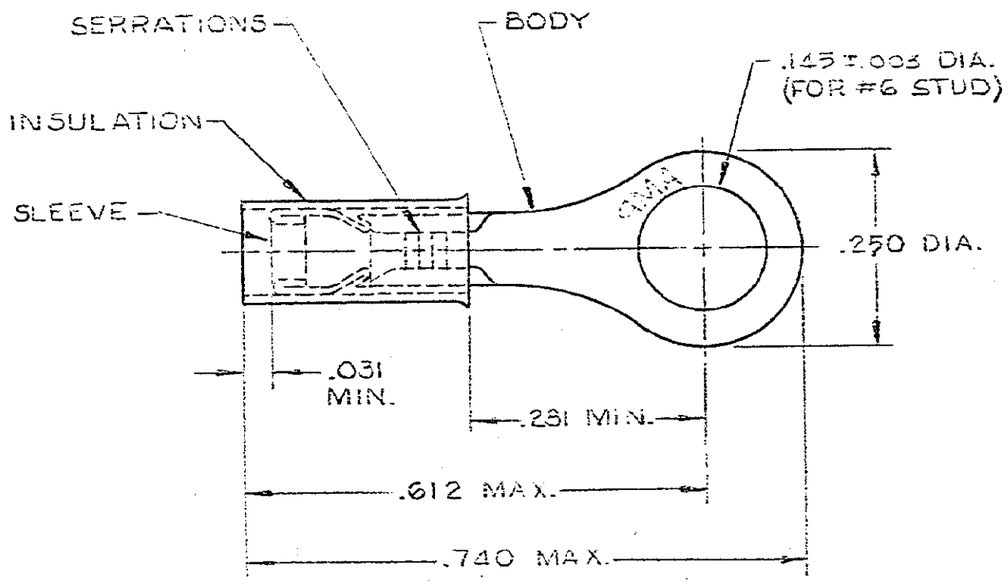

1 WIRE INSULATION DIA. = .050 - .082

2 TONGUE MATERIAL THK. = .018 ±.002

3 BODY FINISH: TIN PLATE (MIL-T-10727) .000100 MIN THK.

4 FOREIGN PRODUCTION ONLY.

	QUANTITY	DESCRIPTION	PART NO
OBSOLETE			~~2-321020-4~~
OBSOLETE			~~2-321020-1~~
OBSOLETE	~~100~~	~~ON TAPE, SM. BOX~~	~~2-321020-8~~
OBSOLETE	1000	ON TAPE, LG. BOX	2-321020-7
OBSOLETE	5000	ON TAPE, REEL	2-321020-3
4	—"—	LOOSE PIECE	321020

UNLESS OTHERWISE SPECIFIED DIMENSIONS ARE IN INCHES. TOLERANCES ON: DECIMALS ±.008 ANGLES ± —

MATERIAL INSULATION: PVC-YELLOW BODY & SLEEVE COPPER (QQ-C-576)

FINISH BODY: 3

CONTRACT NO

DR UTA/REB 10-1-85

CHK Philip Yaklaugh 1/28/86

APPD Allan Irwin 01/30/86

APPD

DSGN APPD

OTHER APPD

AMP | AMP INCORPORATED Harrisburg, Pa.

NAME TERMINAL, P.I.D.G., RING TONGUE WIRE SIZE: 26-22

SIZE	FSCM NO	DRAWING NO
B	00779	321020

SCALE NTS SHEET 1 OF 1

AMP 1470-17

CUSTOMER DRAWING