44/25 mm Center Space Rotary Potentiometers

Type: **EWVYG/EWVYH/EWVYJ/EWVYL**

■ Features

- Outer diameter: 44 mm, Center space diameter: 25 mm
- Can have a built-in LED
- Smooth operation feel

■ Recommended Applications

- Temperature/blower control or mode switching for car air conditioners
- Volume control for car audio equipment

■ Explanation of Part Numbers

1	2	3	4	5	6	7	8	9	10	11	12
E	W	V	Y								
Product Code			Type			Design No.			Taper & Resistance		

■ Specifications

Mechanical	Rotation Angle	300 °
	Rotation Torque (Detents Torque)	15 mN·m to 60 mN·m
Electrical	Nominal Total Resistance	10 kΩ (Tolerance ±20 %)
	Taper	B
	Power Rating	0.1 W
	Residual Resistance	100 Ω max.
	Insulation Resistance	50 MΩ min. (250 Vdc)
	Linearity	±3 % max.
	Dielectric Withstand Voltage	250 Vac for 1 minute
	Noise Level	47 mV max.
Endurance	Operating Life	30000 cycles min.
Minimum Quantity/Packing Unit		50 pcs. (Tray Pack)
Quantity/Carton		250 pcs.

■ Dimensions in mm (not to scale)

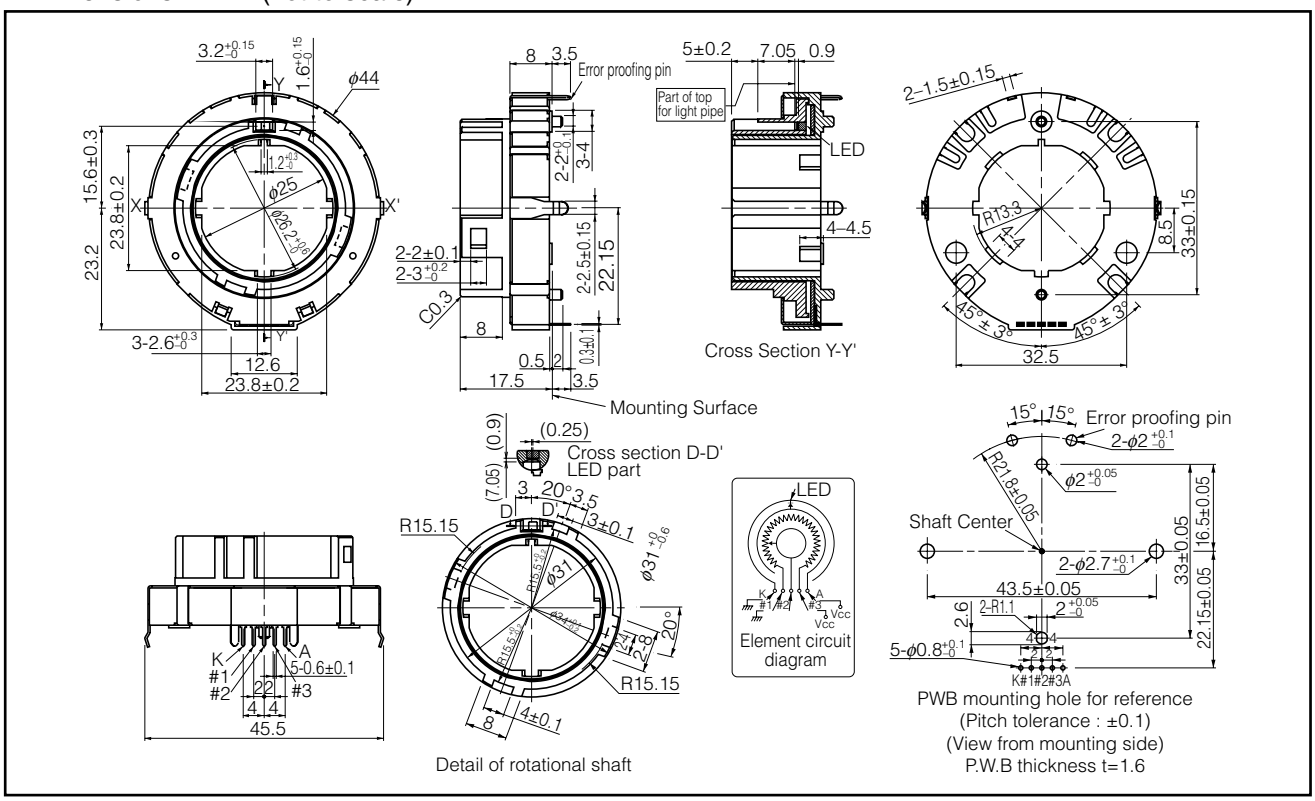

Design and specifications are each subject to change without notice. Ask factory for the current technical specifications before purchase and/or use.
Should a safety concern arise regarding this product, please be sure to contact us immediately.

01 Oct. 2015