| PRODUCT NO | POS NO'S WITH CONTACTS | HOUSING MATERIAL | CONTACT PLATING |
|---|---|---|---|
| 66011-001/-001LF | 2,3,4,5 | SUPER TOUGH NYLON UL 94V-0 GRAY | .76u /30u "AU OVER 2.5u /100u "NI |
| -002/-002LF | ALL | | |
| -003/-003LF | 2 & 5 | | |
| -004/-004LF | 3 & 4 | SUPER TOUGH NYLON UL 94V-0 GRAY | |
| -005/-005LF | 2,3,4,5 | SUPER TOUGH NYLON UL 94V-0 BLACK | .76u /30u "AU OVER 2.5u /100u "NI |
| -006/-006LF | ALL | SUPER TOUGH NYLON UL 94V-0 GRAY | .76u /30u " GXT |
| -007/-007LF | 2,3,4,5 | | .76u /30u " GXT |
| -008/-008LF | 2,3,4,5 | | 1.27u /50u "AU OVER 2.5u /100u "NI |
| -009/-009LF | ALL | SUPER TOUGH NYLON UL 94V-0 GRAY | 0.15u /6u " GOLD FLASH |
| 66011-010/-010LF | 2,3,4,5 | SUPER TOUGH NYLON UL 94V-0 BLACK | .76u /30u " GXT |

LEAD FREE PRODUCT NO.

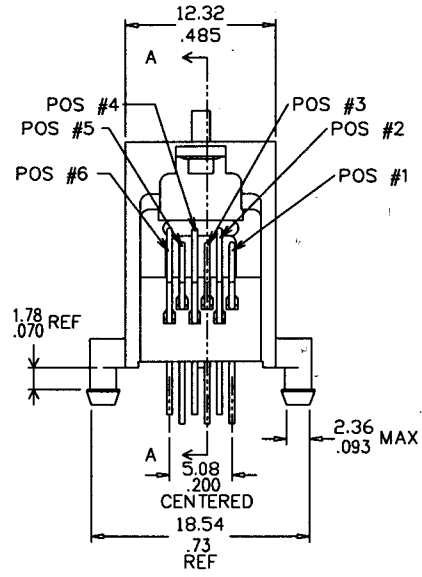


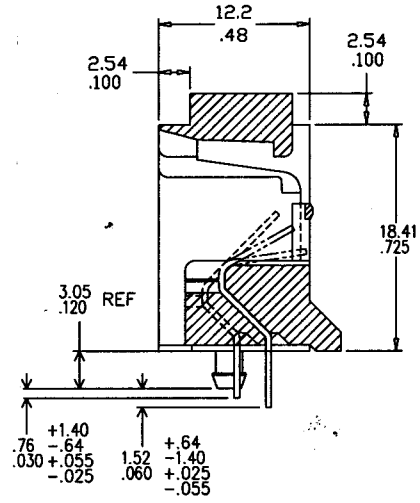


SECTION A-A

NOTES:

1. FOR VISUAL, MECHANICAL AND FUNCTIONAL REQUIREMENTS SEE SPECIFICATION BUS-12-084.
2. GOLD WIRE MATERIAL: PHOS BRONZE ALLOY. UNS-C51000, 135-150M PSI TENSILE PLATING: SEE TABLE
3. DIMENSIONAL TOLERANCE: ±.25/±.010 AT BASE ±.64/±.025 AT TIP
4. FOR ADDITIONAL APPLICATION AND MOUNTING INFORMATION SEE DRAWING TA-390.
5. HOUSING MATERIAL: SEE TABLE.
6. TEST METHOD PER UL-1863. SECTION 22.2
7. THE PRODUCT MEETS EUROPEAN UNION DIRECTIVES AND OTHER COUNTRY REGULATIONS AS DESCRIBED IN GS-22-008.
8. THE HOUSING WILL WITHSTAND EXPOSURE TO 260°C PEAK TEMPERATURE FOR 10 SECONDS IN A WAVE SOLDER APPLICATION WITH A 1.60mm MINIMUM THICK CIRCUIT BOARD.
9. IF LF P/N PACKAGING MEETS GS-14-920 SPECIFICATION.

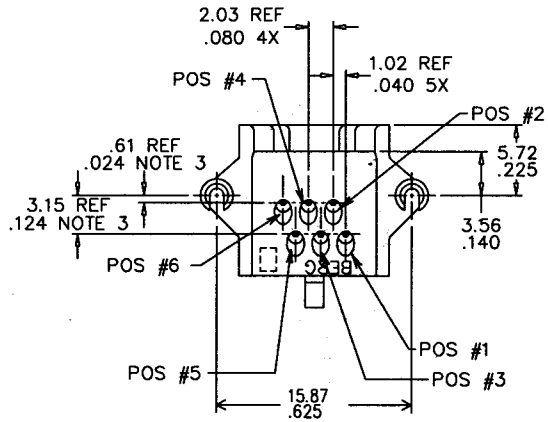


| mat'l code | | | | tolerance unless otherwise specified | | | CUSTOMER COPY | FCI | |
|---|---|---|---|---|---|---|---|---|---|
| rev. | ecn no. | dr | date | linear | .0 ± 0.25 | | | | |
| H | REDRAWN ADD-005 | RLS | 08/01/87 | | .00 ± 0.13 | | projection | title | MOD JACK ASSY (623 PCB) |
| J | ADDED-007 | MSC | 08/12/88 | | .000± 0.05 | | | | |
| K | EXTEND STANDOFF | JWS | 10/19/89 | angles | ± 2° | | | | |
| L | T10087 | JT | 4/4/91 | dr | R. SEIPLE | 06/01/87 | unit mm/inch | product family | code TWN |
| M | T60059 | CL | 02/13/98 | engr | J. SHUEY | 06/01/87 | | size A3 / dwg no. 66011 | |
| N | NOS-0019 | YS | 01/27/05 | chr | J. SHUEY | 06/01/87 | scale 2.5/1 | | sheet 1 OF 1 |
| | | | | appd | J. SHUEY | 06/01/87 | | | |
| sheet | revision | N | | | | | | | |
| index | sheet | 1 | | | | | | | |

Tous droits strictement reservés. Reproduction ou communication a des tiers int pour quelque fins que soit, sans autorisation ecrite du propietaire. propiete de c BERG ELECTRONICS Droits de reproduction BERG ELECTRONICS by

All rights strictly reserved. Reproduction or issue to third parties in any for whatever is not permitted without written authority from the proprietor. Property of c BERG ELECTRONICS. Copyright BERG ELECTRONICS by



PDM: Rev:N STATUS:Released Printed: Jan 15, 2010