Amphenol FCi

PRODUCT NUMBER	PITCH
V30301x000J0G	5.00 mm

PART NO.: V3 03 0 1 x 0 00J0 G

Solid Block
No. of poles
03 3 poles

Color
0 Black (RAL9005)
2 Red (RAL3001/D)
3 Orange(RAL2011/P)
4 Yellow(RAL1018/A)
5 Green(RAL6018/T)
6 Blue (RAL5015/A)
8 Grey(RAL7004/P)
9 White(RAL1102)

RoHS compliant
(lead<4%)
In copper Alloy

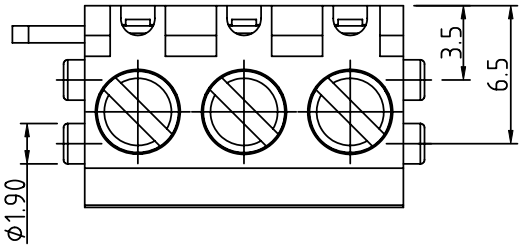

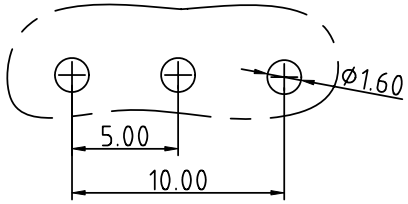

RECOMMENDED P.C.B LAYOUT
TOP VIEW

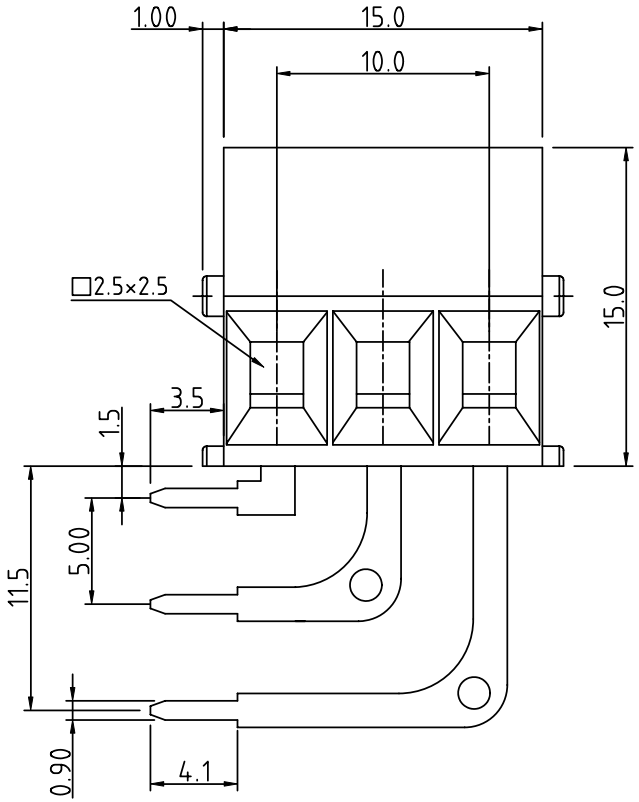

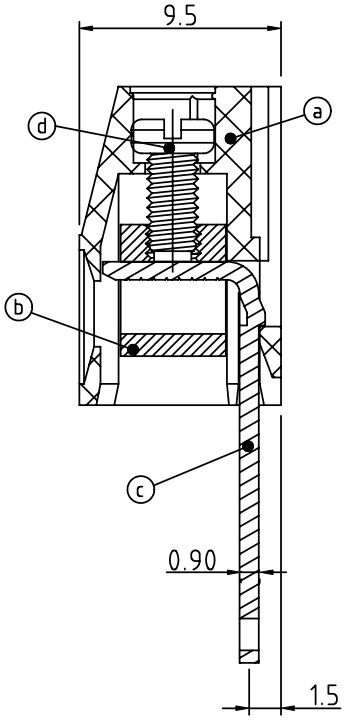

Material:
- Item ⓐ Terminal housing: Thermoplastic (UL 94V-0)
- Item ⓑ Clamp : Brass ,Ni plated
- Item ⓒ Solder pin : Brass , Bright Tin plated over Nickel plated
- Item ⓓ Terminal screw: Steel Zinc plating"-"slot type

Electrical UL 1059
- Voltage rating: 300VAC
- Current rating: 10A
- Wire range:
- Solid wire(AWG): 12-22
- Stranded wire(AWG): 12-22
- Torque(Lb-In): 3.5
- Screw: M2.5
- Wire strip length: 6-7mm
- Withstanding Voltage: 1.6KV
- Operating temperature: -40°C to +115°C
- Wave soldering temperature: 260°C±5°C/5 Sec

mat'l. code				surface ASME Y14.5	tolerance ASME Y14.5	projection
ltr	ecn no	dr	date	tolerances unless otherwise specified		
A		EZ	040814	angles	linear X.±0.5	MM
B	T-24948	HF	090716		X.X±0.3	
				X°±1°	X.XX±0.1	scale
				dr	EVIN ZHONG 040814	
				engr	EVIN ZHONG 040814	
				chr	HANKE FENG 040814	
				appd	SHI JUN 040814	
sheet index	revision	B				
	sheet	1				

product family: TERMINAL BLOCK

title: TERMINAL BLOCK
RISING CLAMP,180D WIRE INLET,LEFT TYPE

dwg no: V30301x000J0G — sheet 1 of 1 — size A4

type: CUSTOMER Drawing

Amphenol FCi

form: A4mmXLc-2016-02-24

PDS: Rev :B STATUS:Released Printed: Oct 18,2016